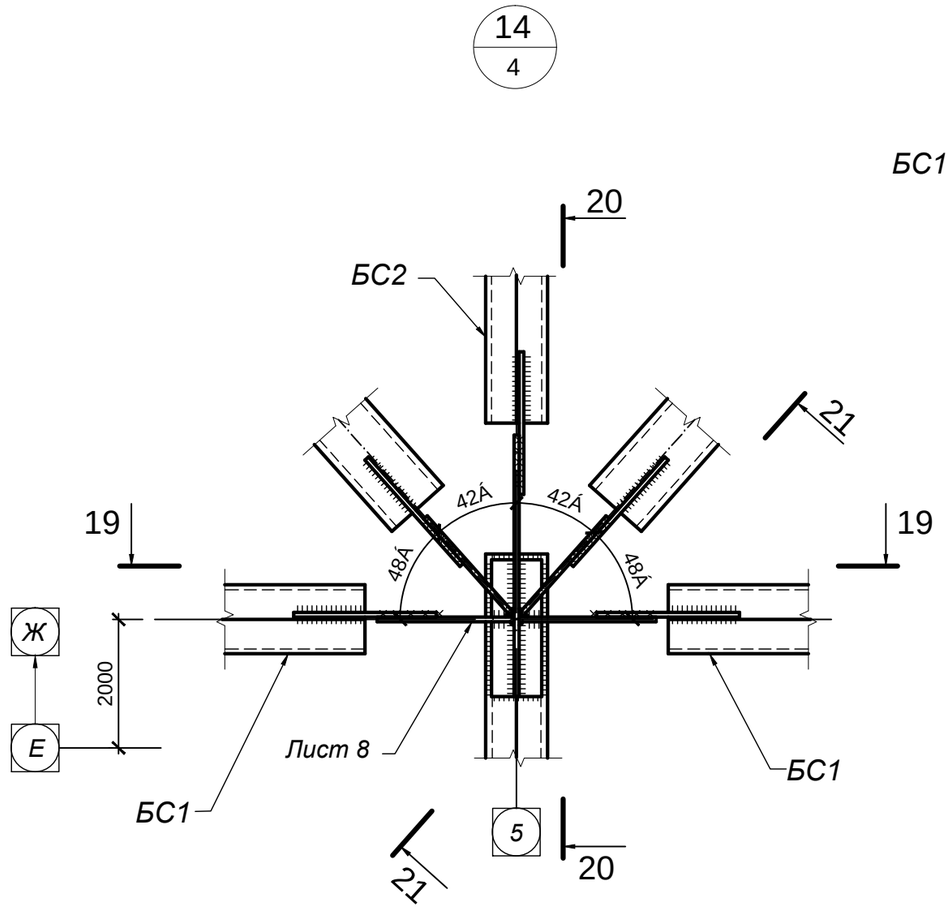

19-19

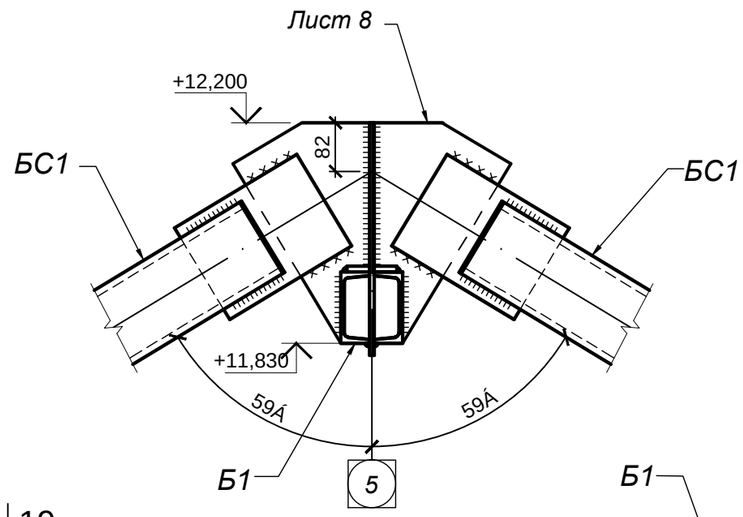

20-20

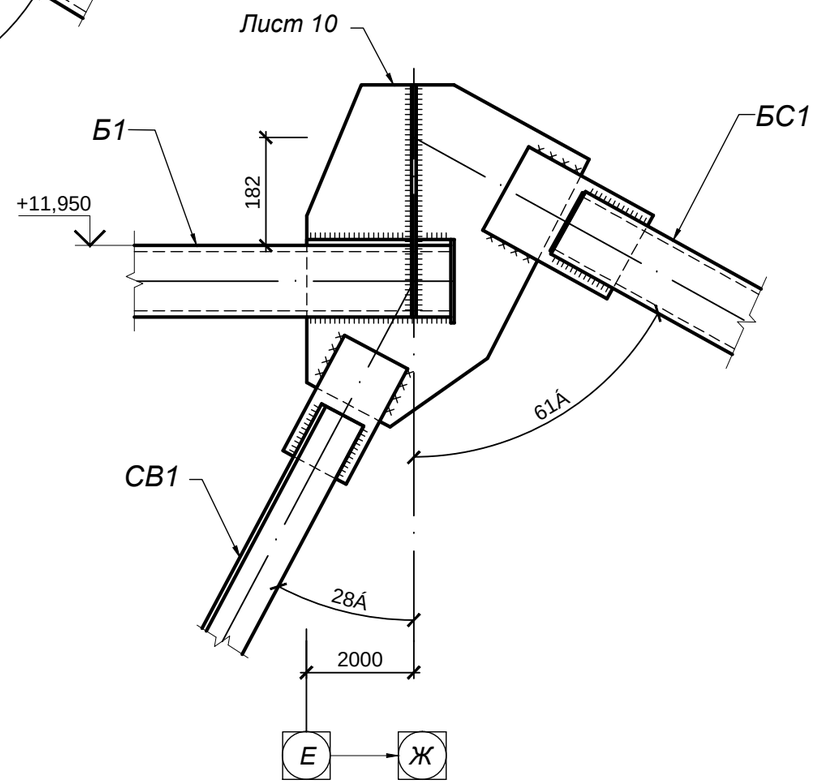

21-21

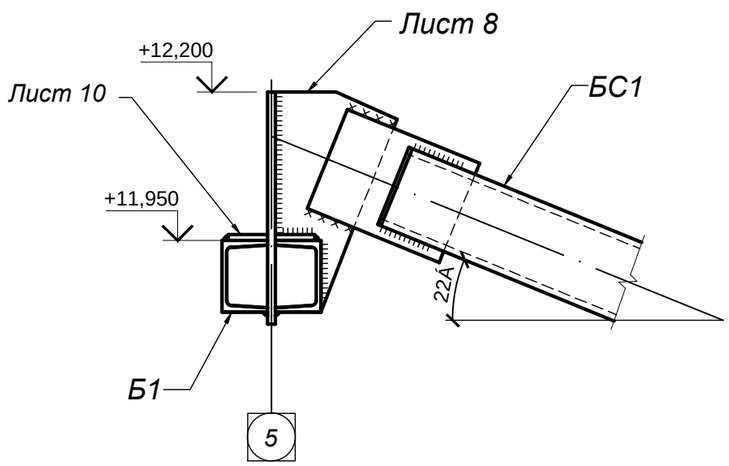

1. [illegible] 4.

[illegible]	[illegible]	[illegible]	[illegible]	[illegible]	[illegible]	
[illegible]						
[illegible]	[illegible]					
[illegible]	[illegible]					
[illegible]						

[illegible]	[illegible]	[illegible]
[illegible]	17	

[illegible] 14 [illegible] 4.
[illegible] 19-19...21-21.

[illegible] 3